ROAD BLOCKER
M30 (K4) ANTI-RAM CLASS

ASTM F2656-07, M30, P1 (-2,1m)

Crash-tested according to

ASTM INTERNATIONAL

RELIABLE, PRACTICAL AND COST-EFFECTIVE SOLUTION TO PROVIDE 100% SECURITY OF YOUR TERRITORY

Anti-ram road blocker intends to prevent unauthorized access of vehicles to a secured perimeter and provide highest anti-terror protection. AUIA road blocker has successfully passed crash test and certified according to ASTM F2656-07, M30, P1 (-2,1m) standard, equivalent to K4. Being developed by engineers with extensive background in appropriate field, road blocker is featured by installation and civil works simplicity, reliability, durability, and functionality. All these features together, make this road-blocker an ultimate solution for a vehicle access control establishment.

Installation areas

- Governmental Institutions
- Military Bases
- Nuclear Power Plants
- Production sites (Industrial Plants)
- Commercial areas
- Financial institutions
- Airport Premises
- Business (Office) Center
- Hotels
- Sport Complexes
- Recreation areas
- Urban areas
- Education Institutions

etc.

CartPoland® Polski Producent Kart Plastikowych

CartPoland Maciej Twardowski
Wólka Mińska ul. Olszowa 5, 05 - 300 Mińsk Mazowiecki
(ang.) office@cartpoland , Tel.: +48-795-183-316 | (ros.) inka@cartpoland.pl, Tel.: +48 795 15 83 20
www.bramkiobrotowe.com | www.bramkiobrotowe.eu | www.cartpoland.pl

Technical dimensions

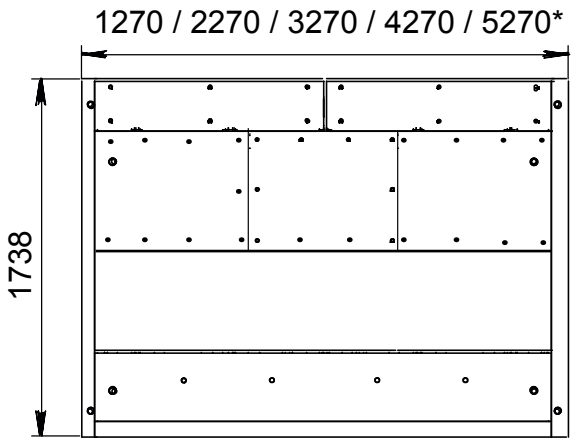

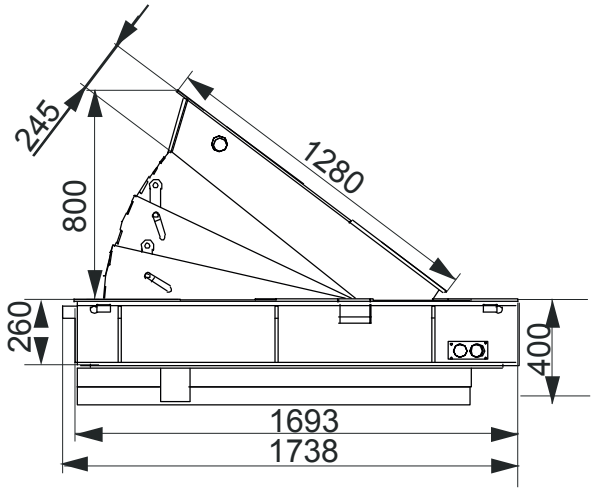

TECHNICAL SPECS:

Model	AUIA-311	AUIA-312	AUIA-313	AUIA-314	AUIA-315
Blocking length* (L), mm	1000	2000	3000	4000	5000
Lift height, mm	800				
Installation depth (with foundation case), mm	400				
Weight (without foundation case), kg	~1500	~1800	~2100	~2800	~3100
Drive	Hydraulic (external)				
Material	Structural steel				
Power supply	3 phase 380 V, 50/60 Hz				
Power consumption, kW	1,5	3	4	5,5	6,5
Load per axle, t	20				
Protection level	IP 67 for Road blocker IP 55 for control box				
Impact resistance, kJ	650,2				
Lowering time, s	2,0				
Rising time, s	3,0 (1,5 with EFO)				
MCBF	2,000,000 cycles				
Operating temperatures, ° C	-10 /+50				
Operating temperatures (with heating system), ° C	-40 /+50				
LED indication	Build-in LED				
Raised position locking	Hydraulic unit hydraulic lock				
Manual emergency lowering	Manual release				

**blocking length can be up to 9000 mm.*

CartPoland Maciej Twardowski
Wólka Mińska ul. Olszowa 5, 05 - 300 Mińsk Mazowiecki
(ang.) office@cartpoland , Tel.: +48-795-183-316 | (ros.) inka@cartpoland.pl, Tel.: +48 795 15 83 20
www.bramkiobrotowe.com | www.bramkiobrotowe.eu | www.cartpoland.pl

Foundation case dimensions

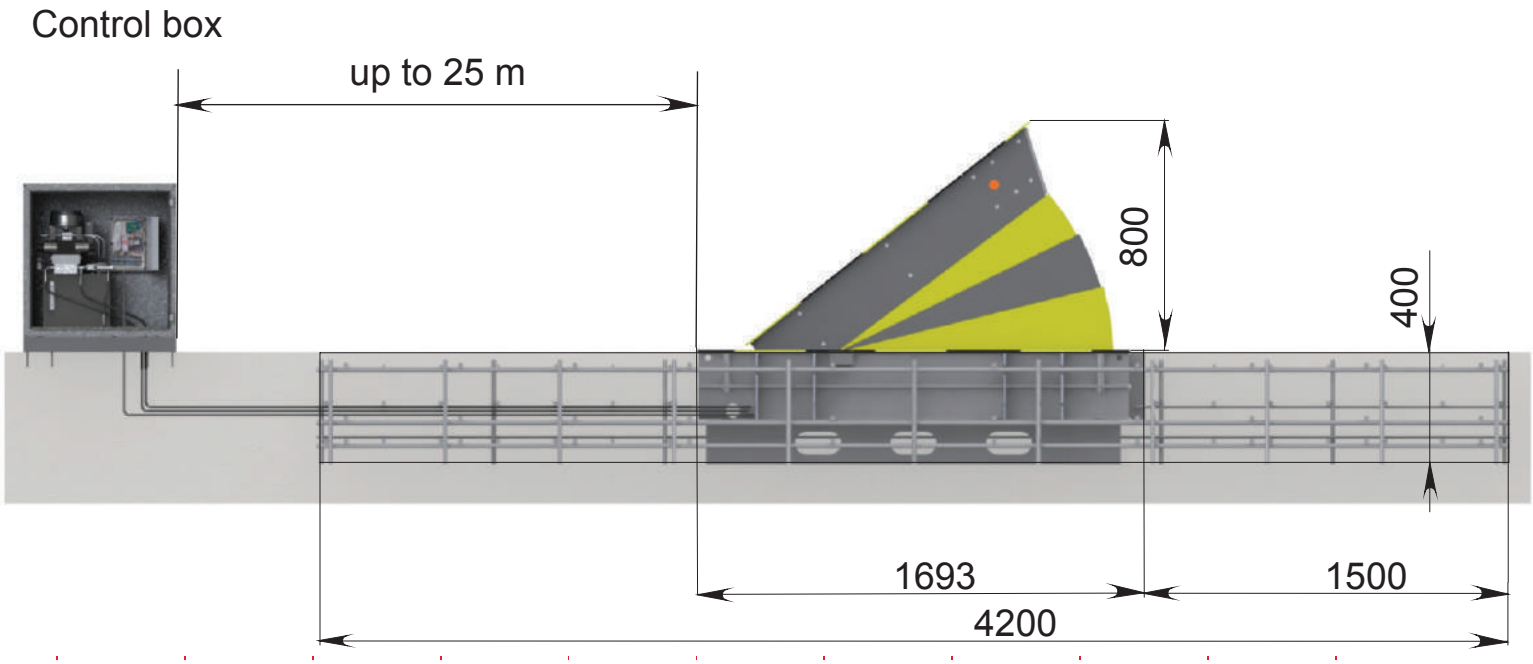

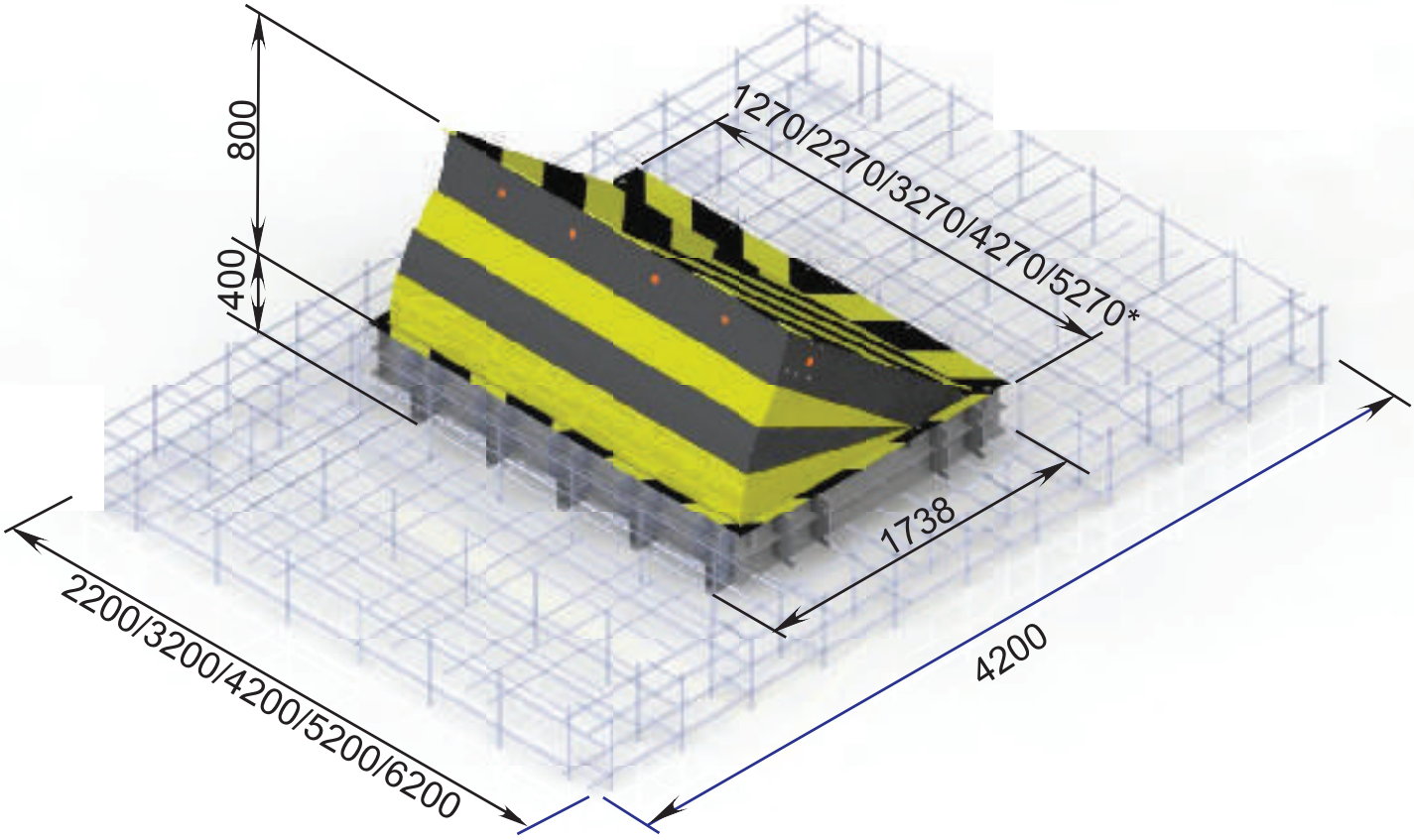

CartPoland Maciej Twardowski
Wólka Mińska ul. Olszowa 5, 05 - 300 Mińsk Mazowiecki
(ang.) office@cartpoland , Tel.: +48-795-183-316 | (ros.) inka@cartpoland.pl, Tel.: +48 795 15 83 20
www.bramkiobrotowe.com | www.bramkiobrotowe.eu | www.cartpoland.pl

CTS
crashtest-service.com

Contracting Client:
Tiso Blockers, LLC
72, Yamska str.
03150 Kyiv
Ukraine

Certificate

of passed Barrier Testing Programme

ASTM F 2656-07, M30, 22th October 2015, CTS Test-No: 18250	
Type of product:	Road Blocker „AUIA – 313"
Vehicle penetration:	-2.1 m (dynamic)
Mass [Target]:	6800 kg (±140 kg)
Mass [Test]:	6850 kg
Impact speed [Target]:	50.0 km/h (45.0 km/h – 60.0 km/h)
Impact speed [Test]:	49.6 km/h
Angle:	90 °
Major debris:	n/a (≥ 25 kg)
Observations	
Vehicle restrained:	yes
Vehicle immobilized:	yes
Road Blocker still functions after impact:	yes
Penetration Rating:	**P1 (-2.1m)**

Sincerely
crashtest-service com®
Dipl.-Ing. Peter Schimmelpfennig
(Managing Partner)

Amelunxenstraße 30, 48167 Münster, Germany

www.crashtest-service.com

Advantages

- Shallow mounting installation type
- Reliability and durability
- Low operating & maintenance cost
- Service simplicity
- High intensity operation mode

Additional options

- Hydraulic hose extension
- Wireless control units
- Traffic light
- Heating device (for climates with bellow 0°C)
- Induction loop one channel detector
- Sound alarm
- EFO (Emergency Fast Rising Operator)
- Manual Pump unit;
- Others upon request

CartPoland® Polski Producent Kart Plastikowych

CartPoland Maciej Twardowski
Wólka Mińska ul. Olszowa 5, 05 - 300 Mińsk Mazowiecki
(ang.) office@cartpoland , Tel.: +48-795-183-316 | (ros.) inka@cartpoland.pl, Tel.: +48 795 15 83 20
www.bramkiobrotowe.com | www.bramkiobrotowe.eu | www.cartpoland.pl