FREEWAY TURNSTILE

SWEEPER

The swinging waist-high turnstile Sweeper can operate in two modes: normally closed and normally open. Both access directions are free when the turnstile is deenergized. The turnstile is suitable for the most sites, where access control and restriction is required due to functionality, ease of use and stylish appearance. The primary purpose of the turnstile Sweeper is arrangement of access in one or two directions.

ELEGANT ACCESS SOLUTION WITH ENTRANCE ACCESSIBILITY SIGNAL LIGHTS

550/900 mm	30 pers/min	0,8 sec	IP 41			
PASSAGE WIDTH	CROSSING CAPACITY	OPENING/CLOSING	PROTECTIVE LEVEL	PASSAGE FOR DISABLED	ANTI-TAILGATING	BI-DIRECTIONAL

Advantages

- Sweeper equipped with sensors that allows to detect tailgating
- Ultra quite direct drive unit
- Successful combination of affordable price and high quality
- Customized surface finish and top lid
- Steadfast housing suitable for high traffic areas
- Solution for disabled and trolley access
- Can be integrated with any type of access control systems
- Low power consumption
- Low noise system operation
- Can be mounted on a mobile platform (CartPoland Frame-M)

Standard

- Wired remote control panel

Options

- Any access control systems upon request (e.g. passes counter, RFID device, coin acceptor push button, fingerprint, bar-code and QR-code reader etc.)
- Radio controller
- Heating function for external installation
- Automatic opening when power goes off

* *other passage width available optionally up on request*

CartPoland®
Polski Producent Kart Plastikowych

CartPoland, Maciej Twardowski
Wólka Mińska ul. Olszowa 5,
05 - 300 Mińsk Mazowiecki

maciej@cartpoland.pl, Tel.: +48 606 773 276
inka@cartpoland.pl, Tel.: +48 795 15 83 20
www.cartpoland.pl | bramkiobrotowe.eu

Technical Specifications:

Width, mm	Single pass (550) - 950 Two pass (550+550) - 1700
Length, mm	1310
Height, mm	1000
Weight, kg (not more)	Single pass - 180 Two pass - 260
Mechanism	Motorized

Controlled by:

access control system;

manual control

When power goes OFF both directions are free.

Electrical Specifications:

- Voltage:
  - from the AC (100-240)V, 50/60Hz;
  - from a DC source 12 V;
- Maximum power consumption 155W per pass.

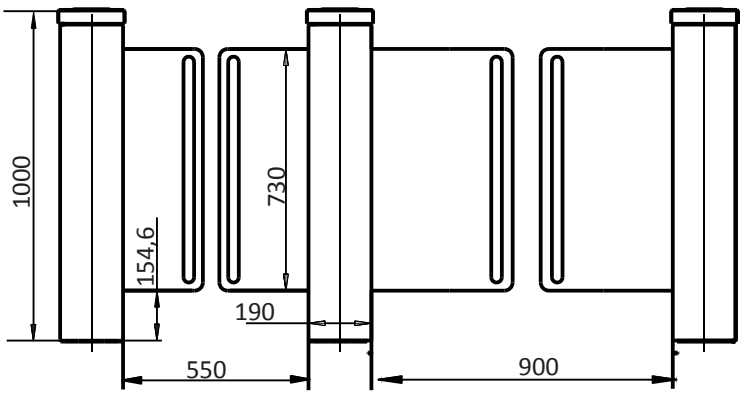

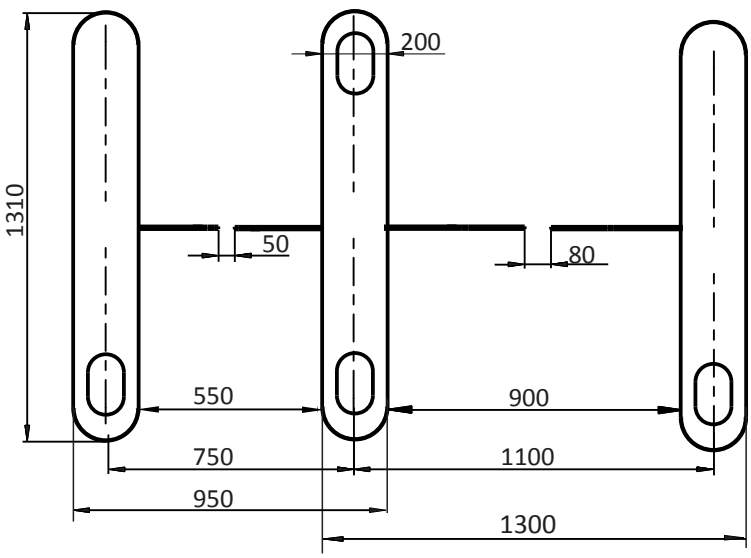

Materials*

Standard housing	Brushed SS AISI 304
Available housing	Brushed SS AISI 316 Polished SS AISI 304 Polished SS AISI 316 Powder coated RAL
Top lid	Black glass

Installation areas:

- Governmental Institutions
- Military Bases
- Nuclear Power Plants
- Production sites (Industrial Plants)
- Commercial areas
- Financial institutions
- Airport Premises
- Business (Office) Centers
- Hotels
- Sport Complexes
- Recreation areas
- Urban areas
- Education Institutions
- others

**other materials and colors available optionally up on request*

CartPoland, Maciej Twardowski
Wólka Mińska ul. Olszowa 5,
05 - 300 Mińsk Mazowiecki

maciej@cartpoland.pl, Tel.: +48 606 773 276
inka@cartpoland.pl, Tel.: +48 795 15 83 20
www.cartpoland.pl | bramkiobrotowe.eu

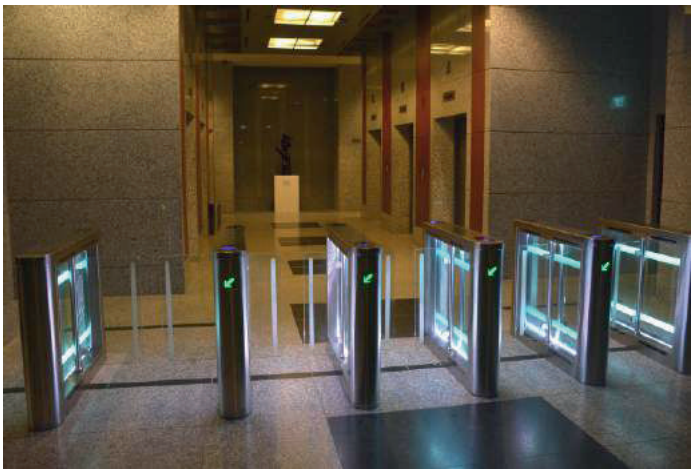

CartPoland, Maciej Twardowski
Wólka Mińska ul. Olszowa 5,
05 - 300 Mińsk Mazowiecki

maciej@cartpoland.pl, Tel.: +48 606 773 276
inka@cartpoland.pl, Tel.: +48 795 15 83 20
www.cartpoland.pl | bramkiobrotowe.eu

CartPoland, Maciej Twardowski
Wólka Mińska ul. Olszowa 5,
05 - 300 Mińsk Mazowiecki

maciej@cartpoland.pl, Tel.: +48 606 773 276
inka@cartpoland.pl, Tel.: +48 795 15 83 20
www.cartpoland.pl | bramkiobrotowe.eu